SMK
SOLID CAPACITOR MFRS

◆ 生产流程图

◆ **Production Flow Chart**

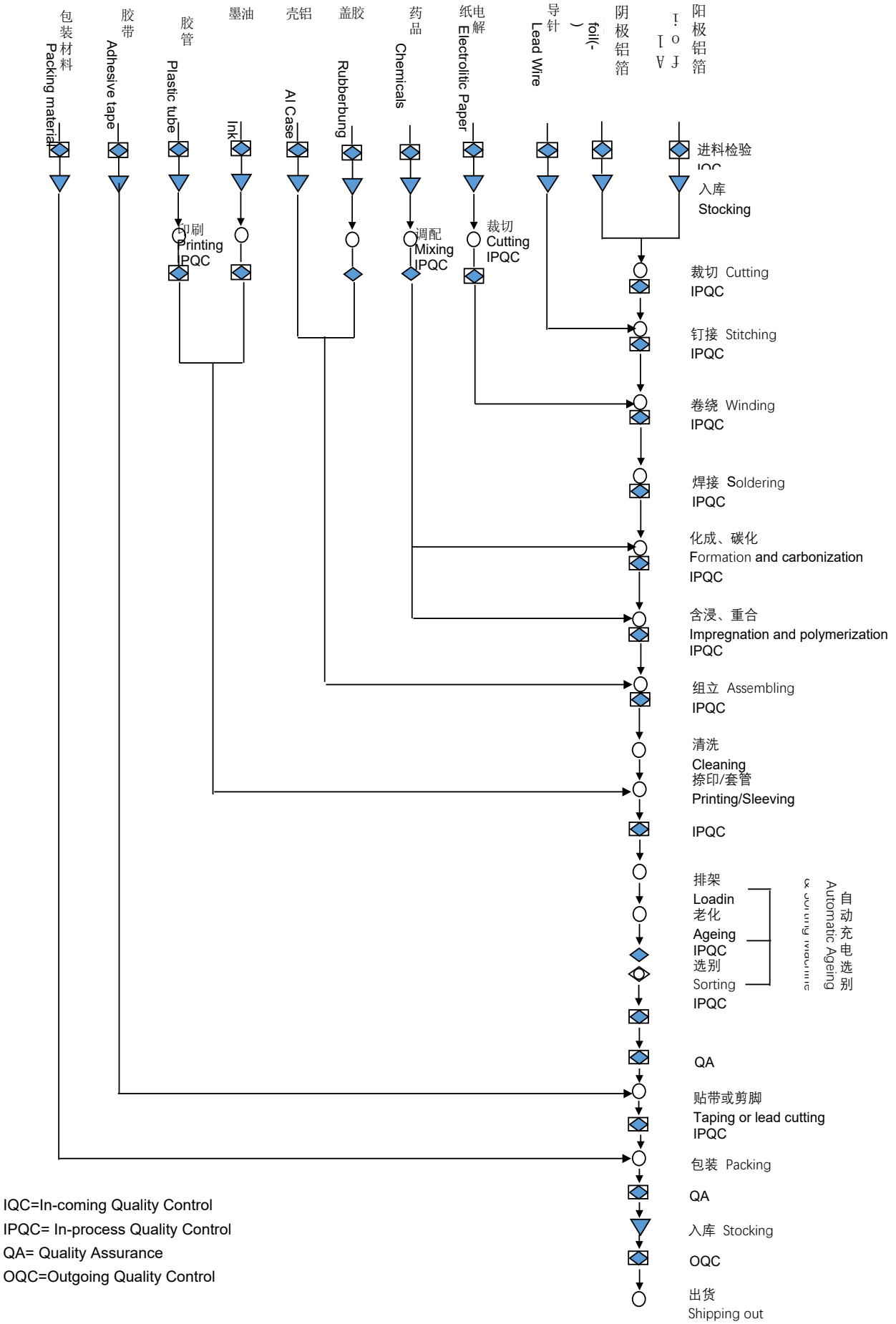

IQC=In-coming Quality Control

IPQC= In-process Quality Control

QA= Quality Assurance

OQC=Outgoing Quality Control